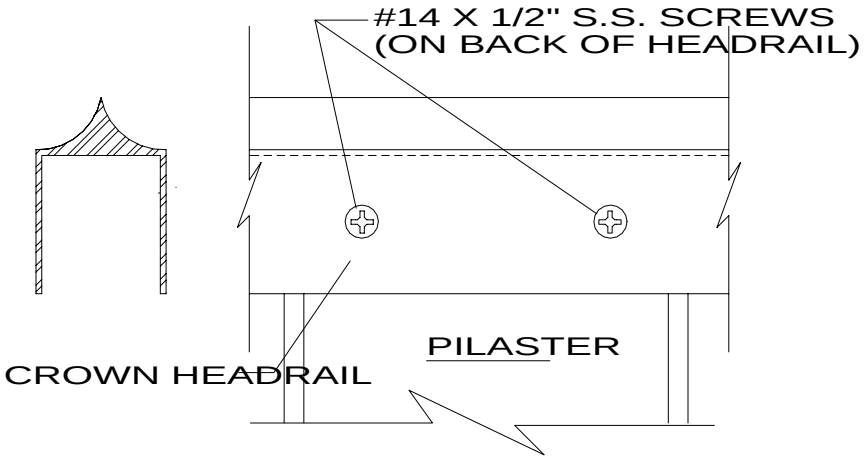

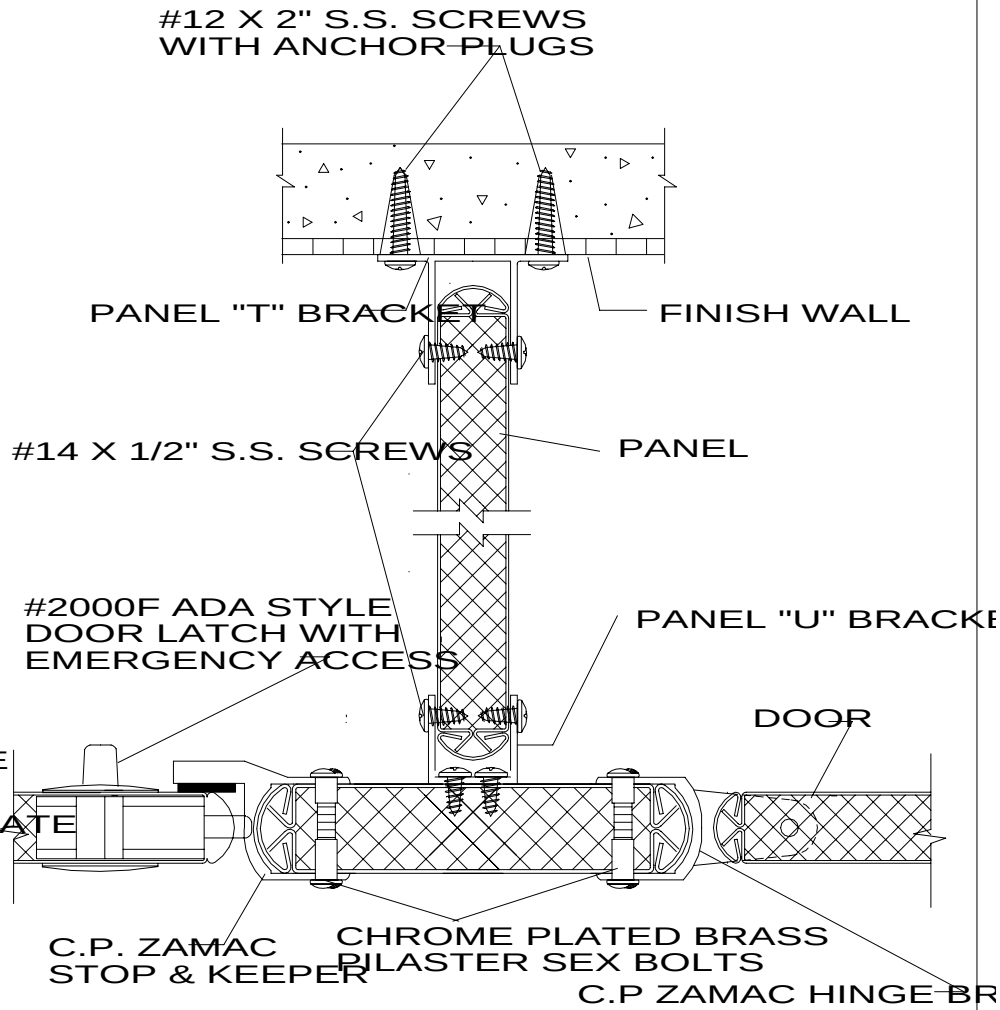

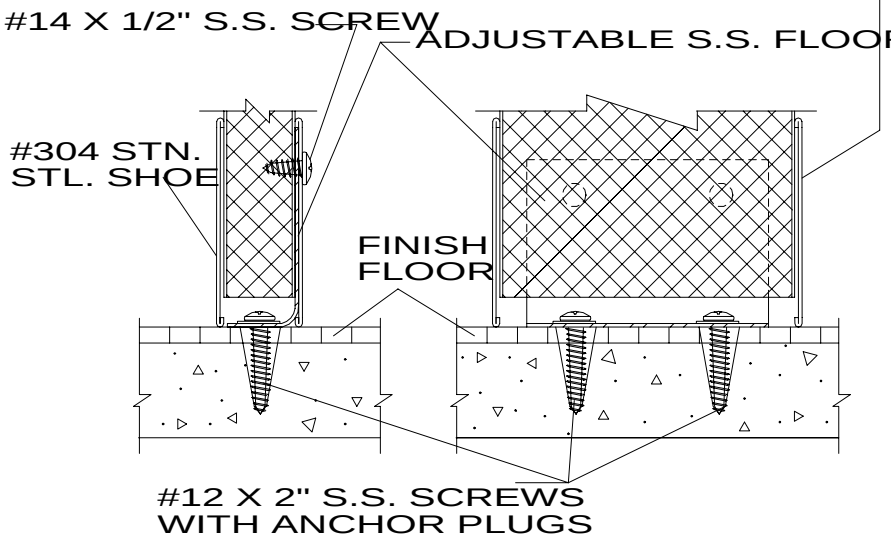

SERIES OH-3 CONSTRUCTIO

ROCKVILLE PARTITIONS INCORPORATED