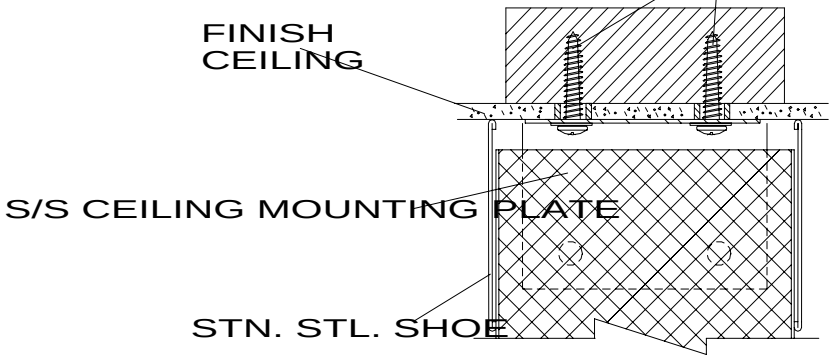

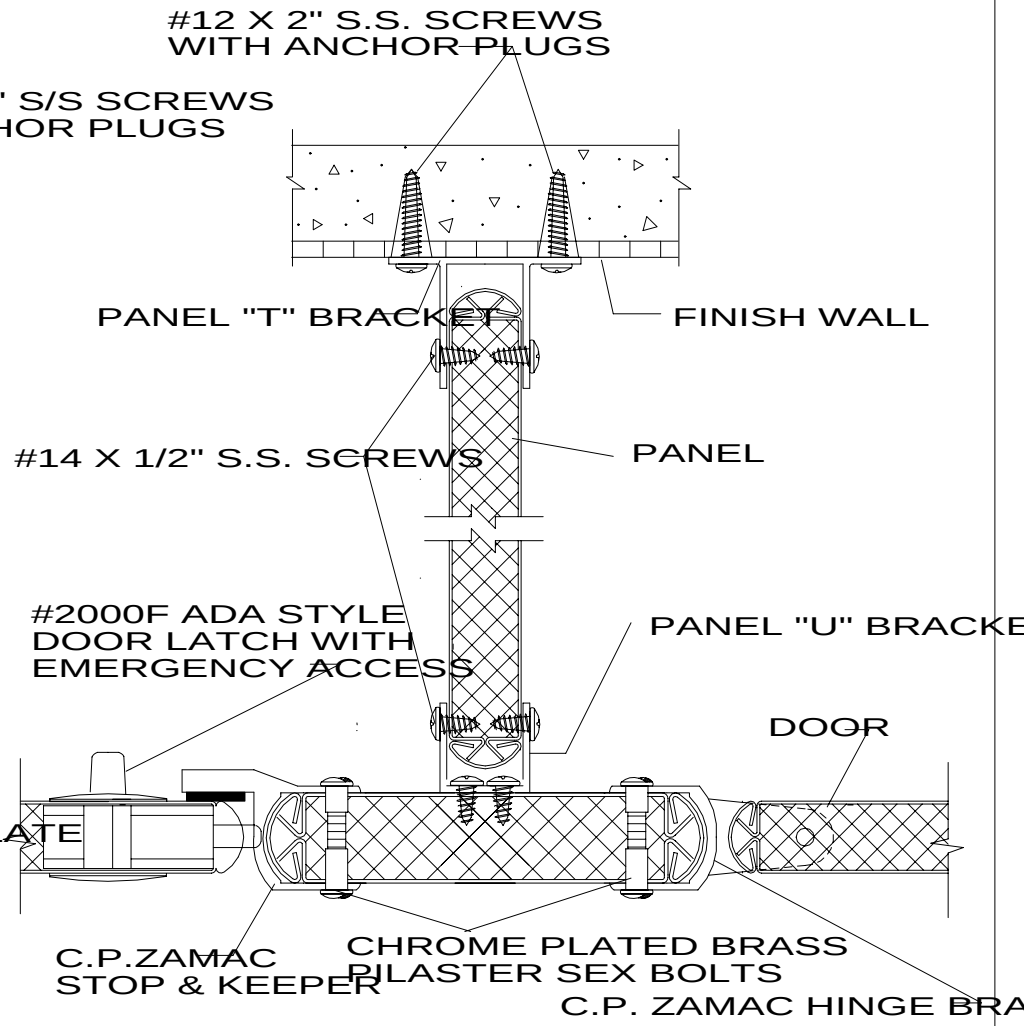

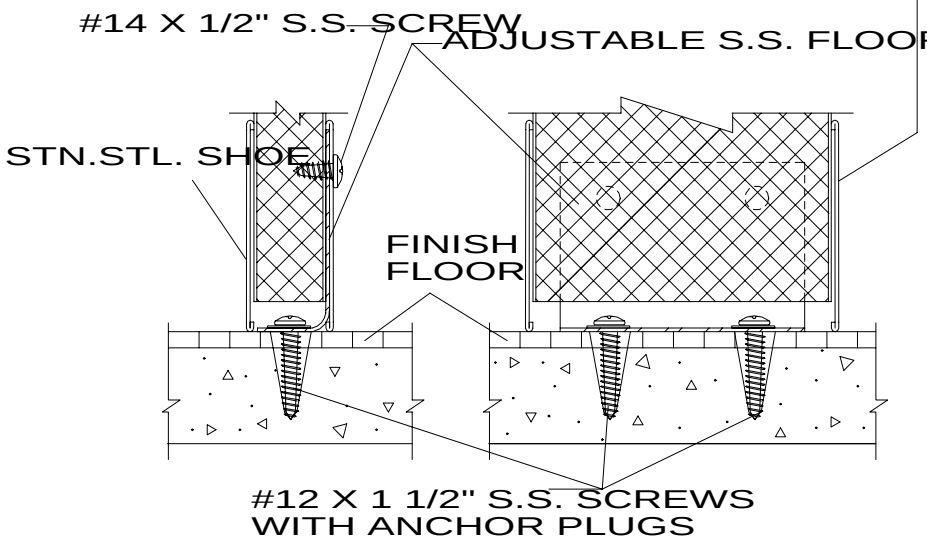

SERIES FC-3 FLR. TO CLG.
CONSTRUCTION DETAILS

ROCKVILLE PARTITIONS INCORPORATED