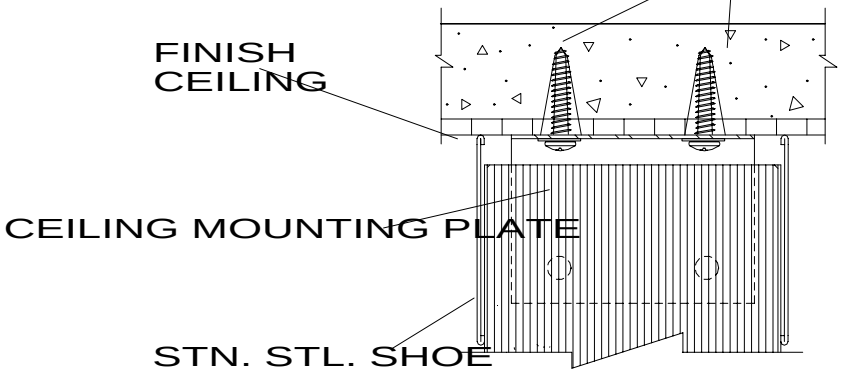

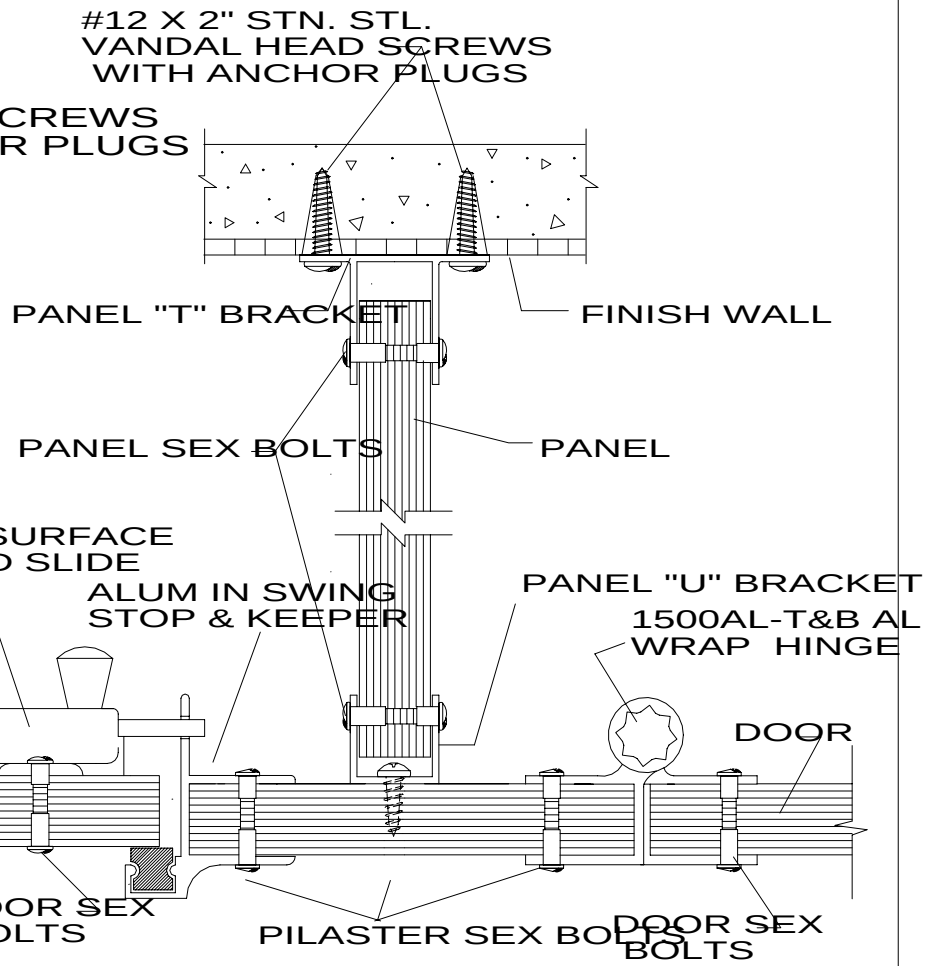

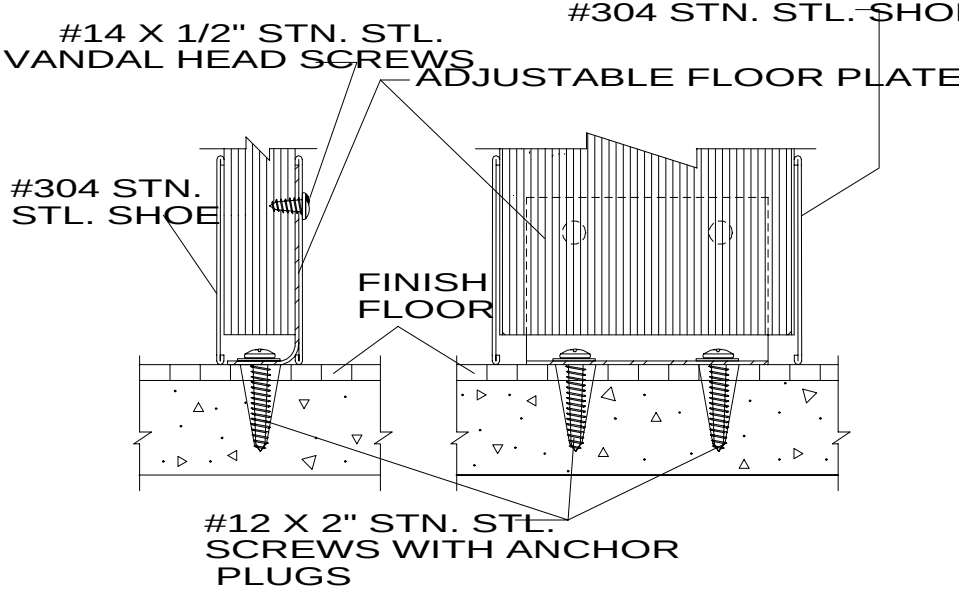

SERIES FC-6 CONSTRUCTIO

ROCKVILLE PARTITIONS INCORPORATED