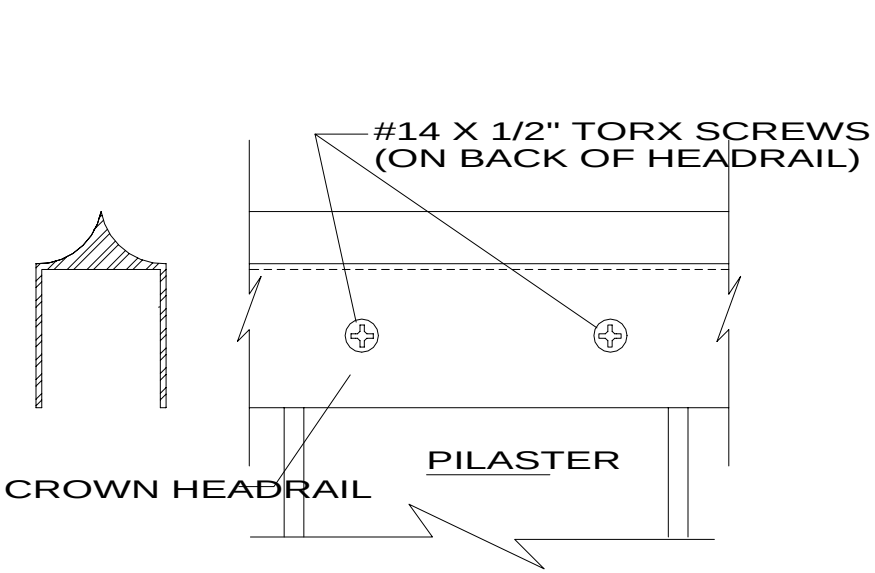

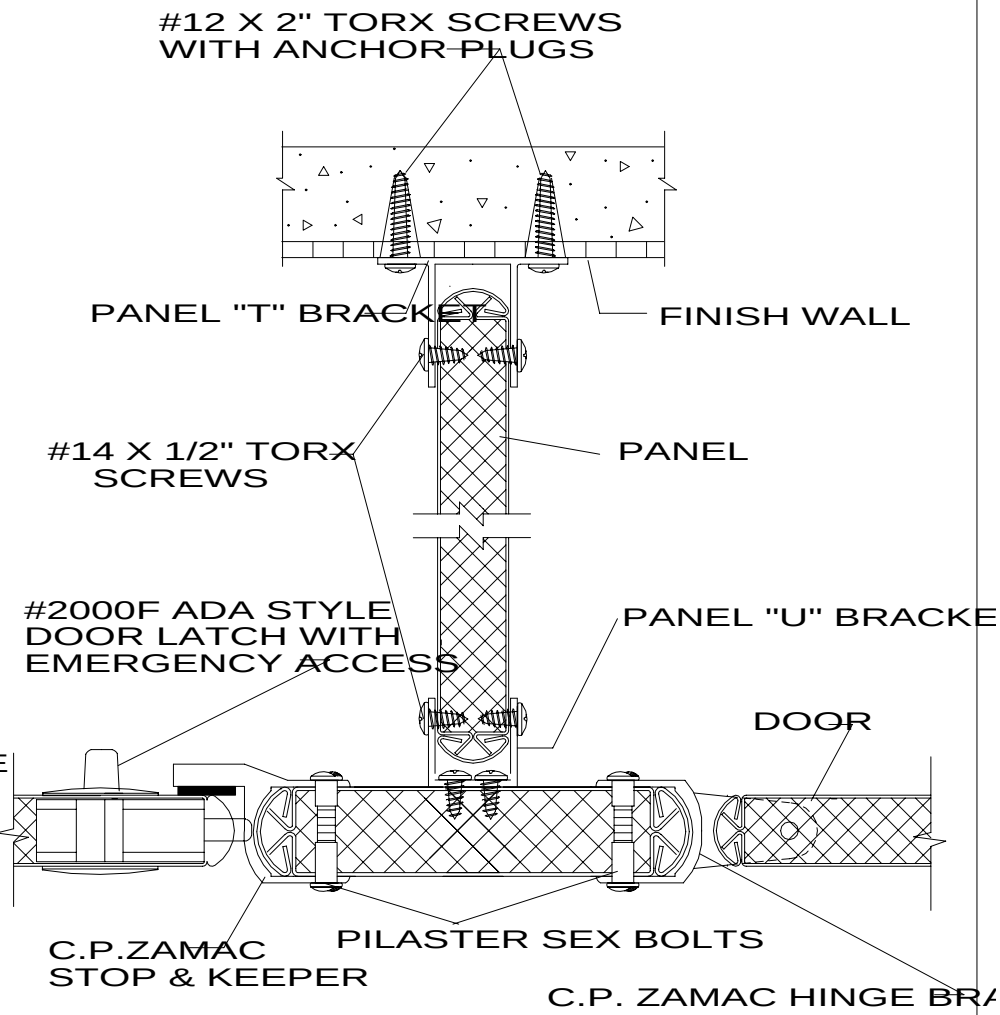

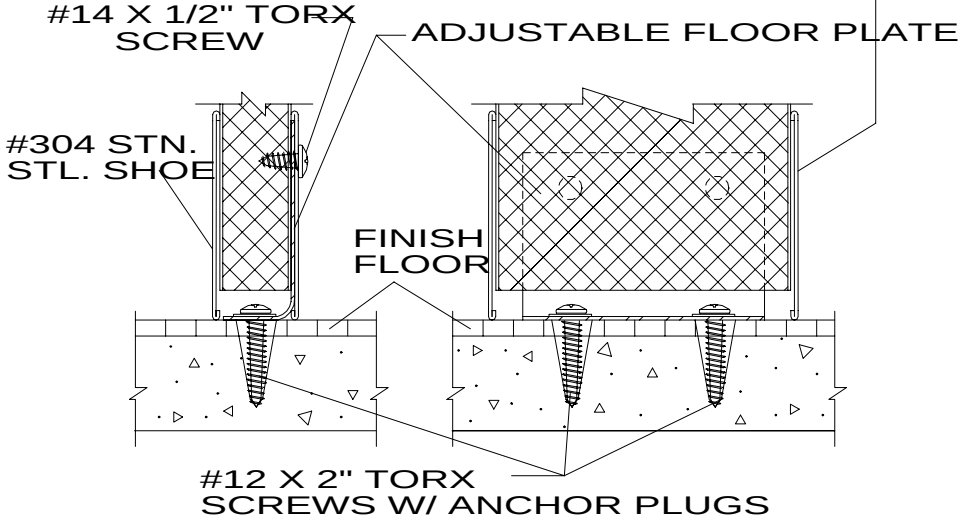

SERIES OH-5 CONSTRUCTIC

ROCKVILLE PARTITIONS INCORPORATED