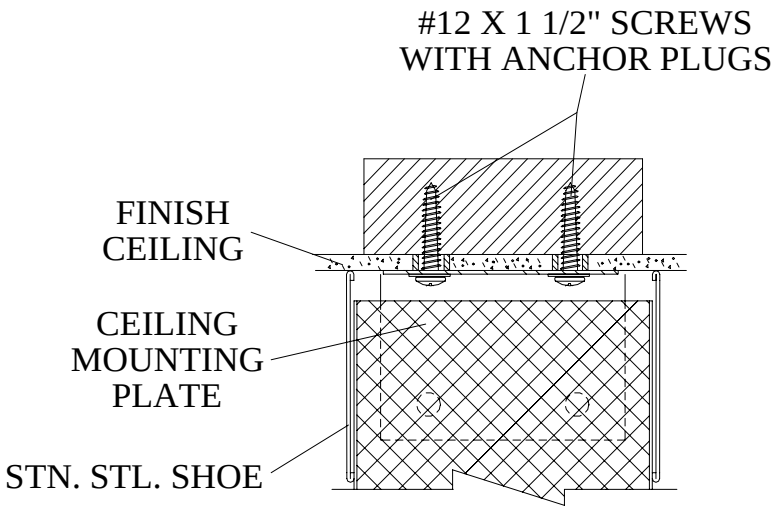


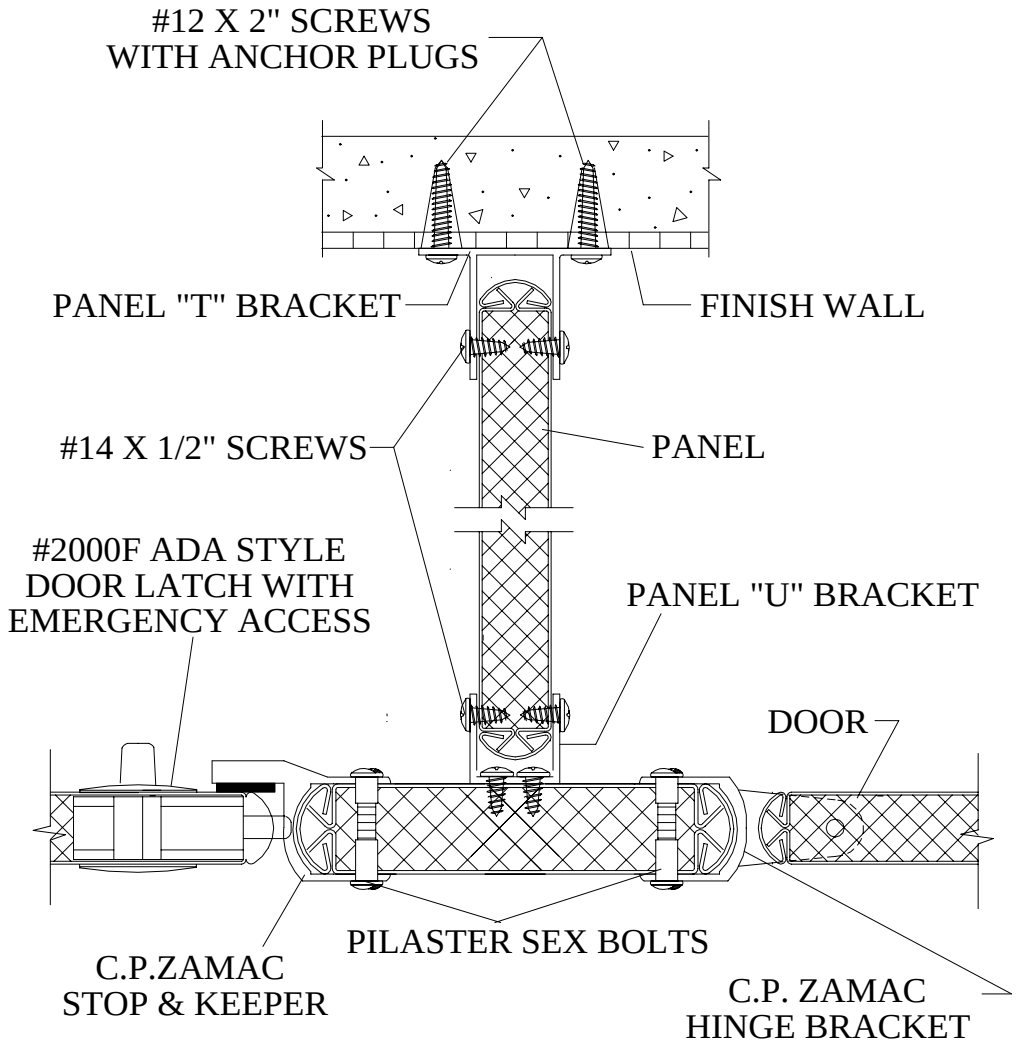


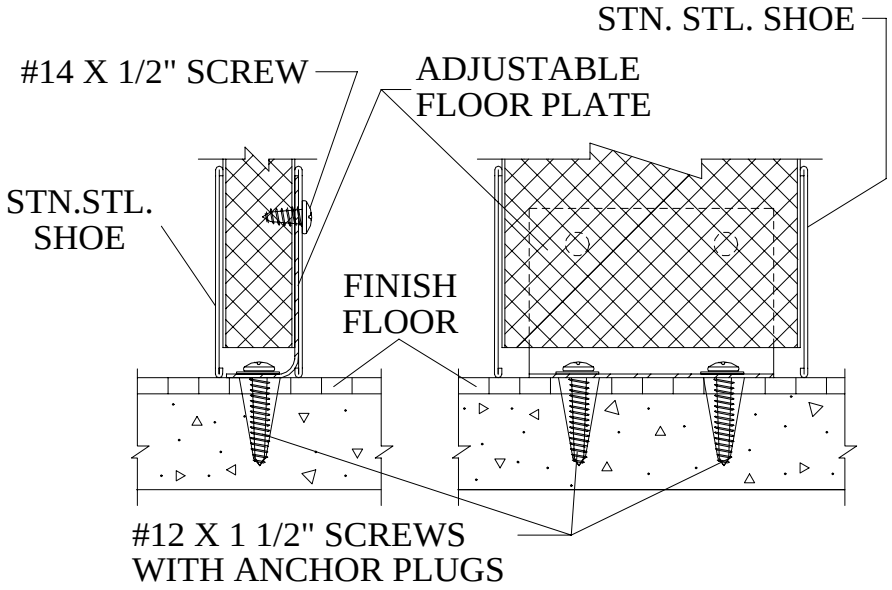


SERIES FC-5 FLR. TO CLG.
CONSTRUCTION DETAILS

**ROCKVILLE PARTITIONS INCORPORATED**