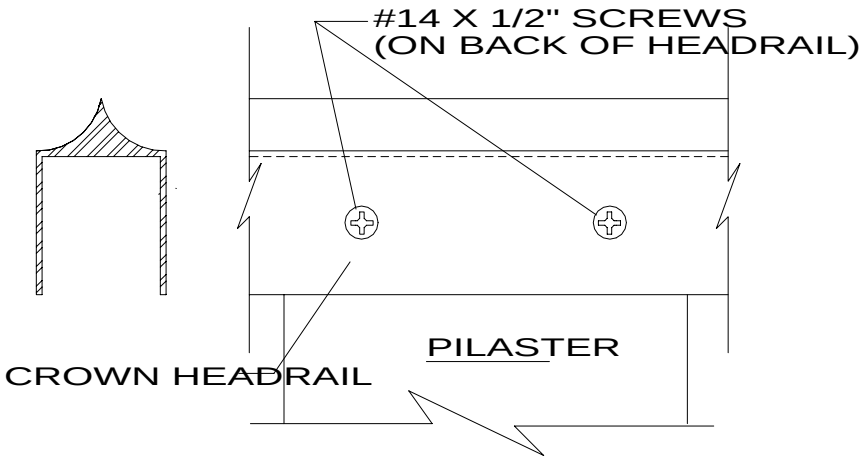

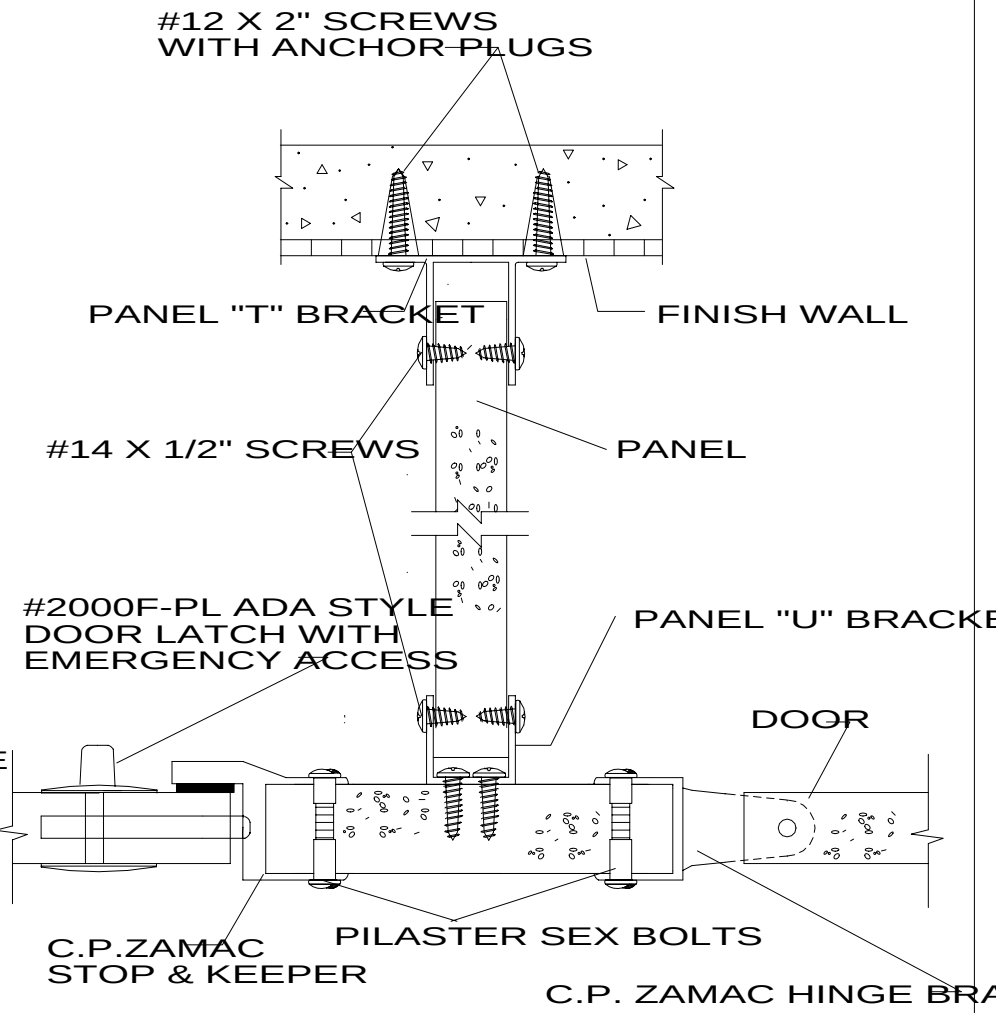

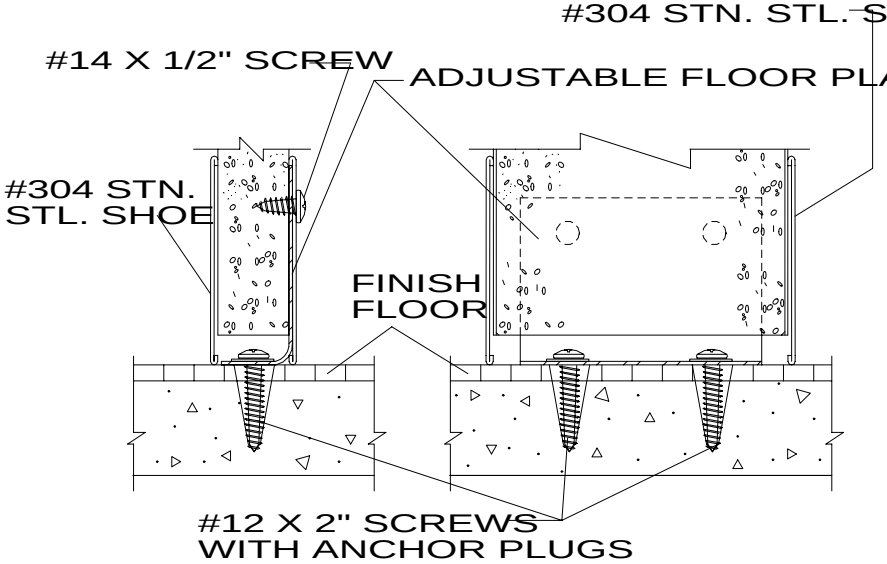

SERIES OH-4 CONSTRUCTIO

ROCKVILLE PARTITIONS INCORPORATED